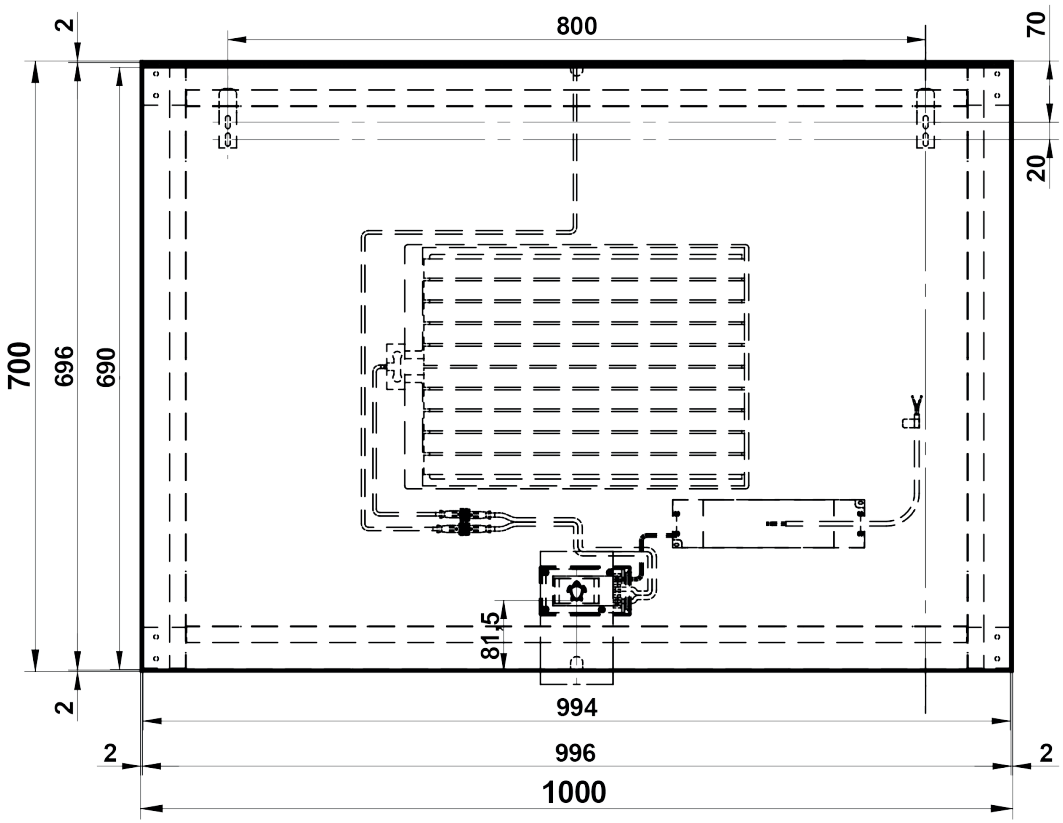


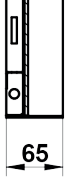


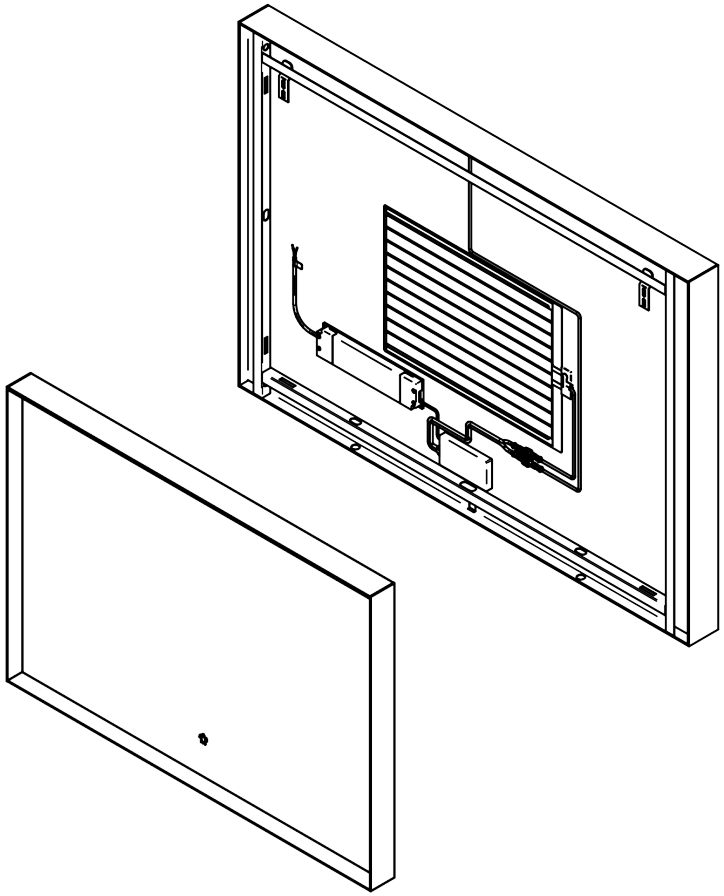

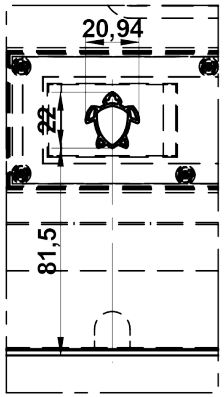


TORTU

## TUVALU

mirror, rectangle 100 x 70
TS610070

L 1000 mm W 700 mm H 65 mm
incl. dimmable lighting switch and heating
16W/m - 1800 lumen/m - 4000K - IP44

tortubrand.com