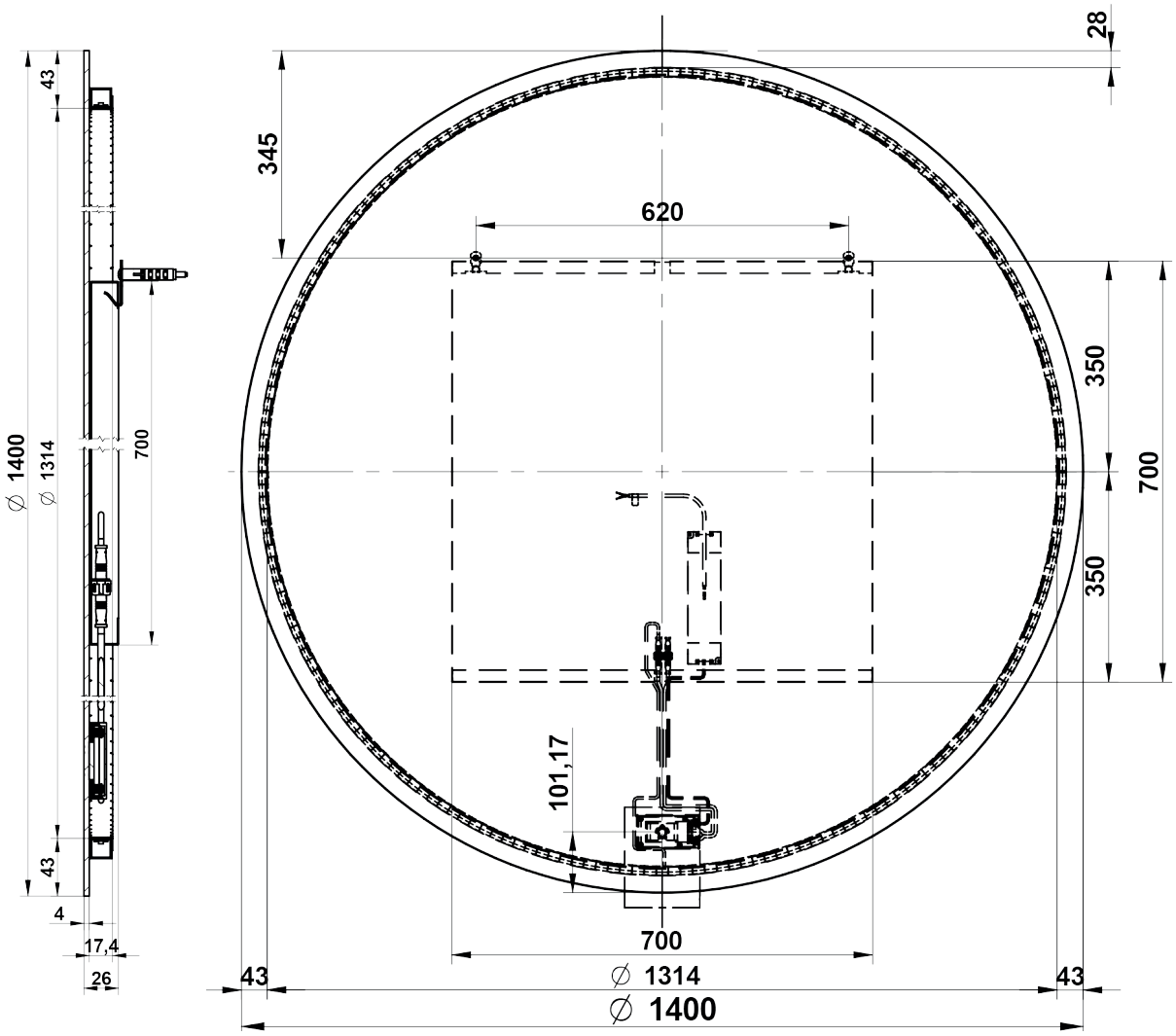

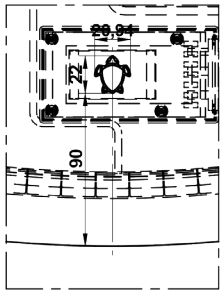

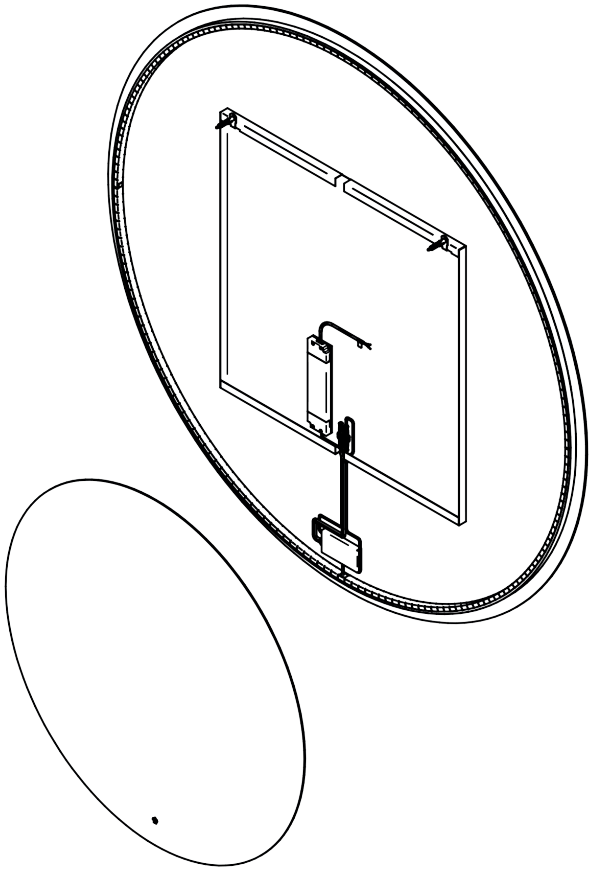

TORTU

SIMPEL

mirror, round Ø 140

TS2140

L 1400 mm W 1400 mm H 26 mm

incl. dimmable lighting switch

10W/m - 650 lumen/m - 3000K - IP55

tortubrand.com