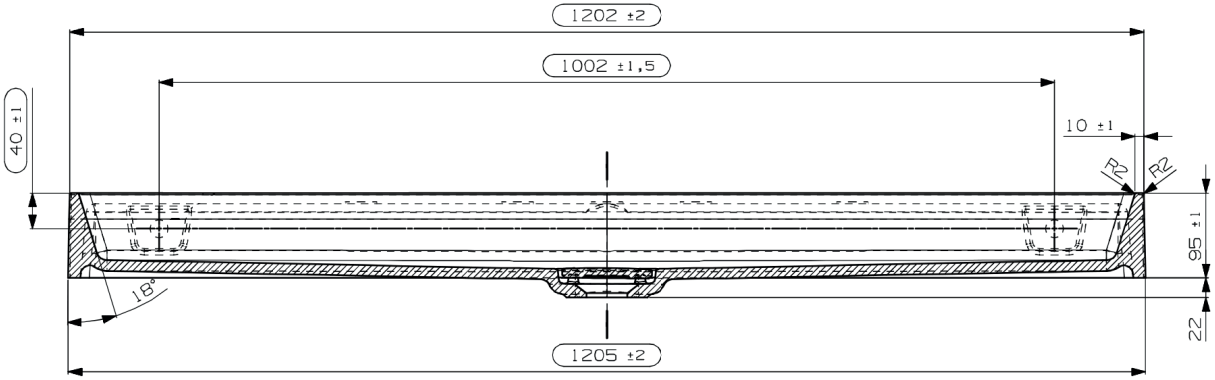

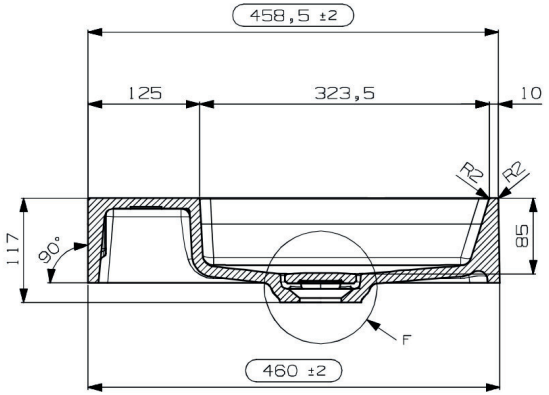

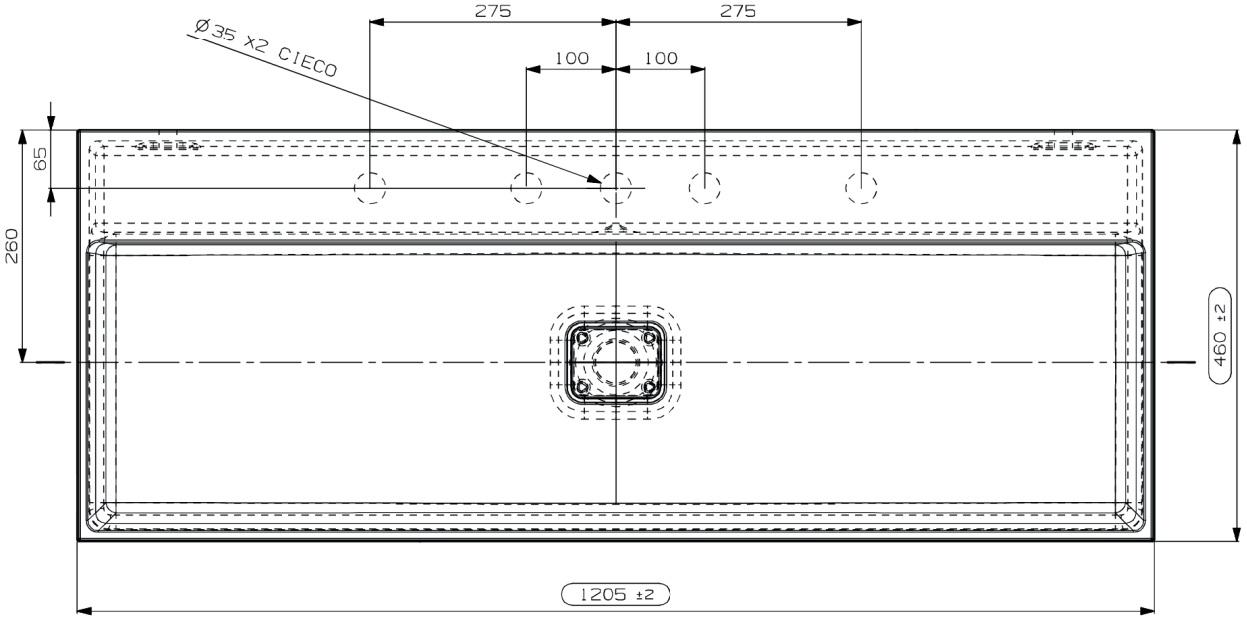

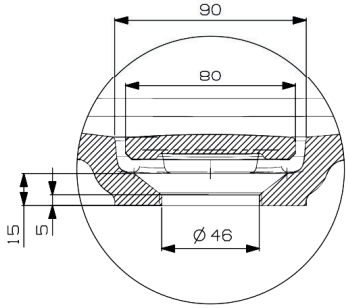

TORTU

TUVALU 120 3.0

washbasin

M08313

L 1205 mm **W** 460 mm **H** 95 mm

material: MineralSolid | MiniralMarmo

weight: 24 kg

tortubrand.com